# KT-J019-ARC200D+

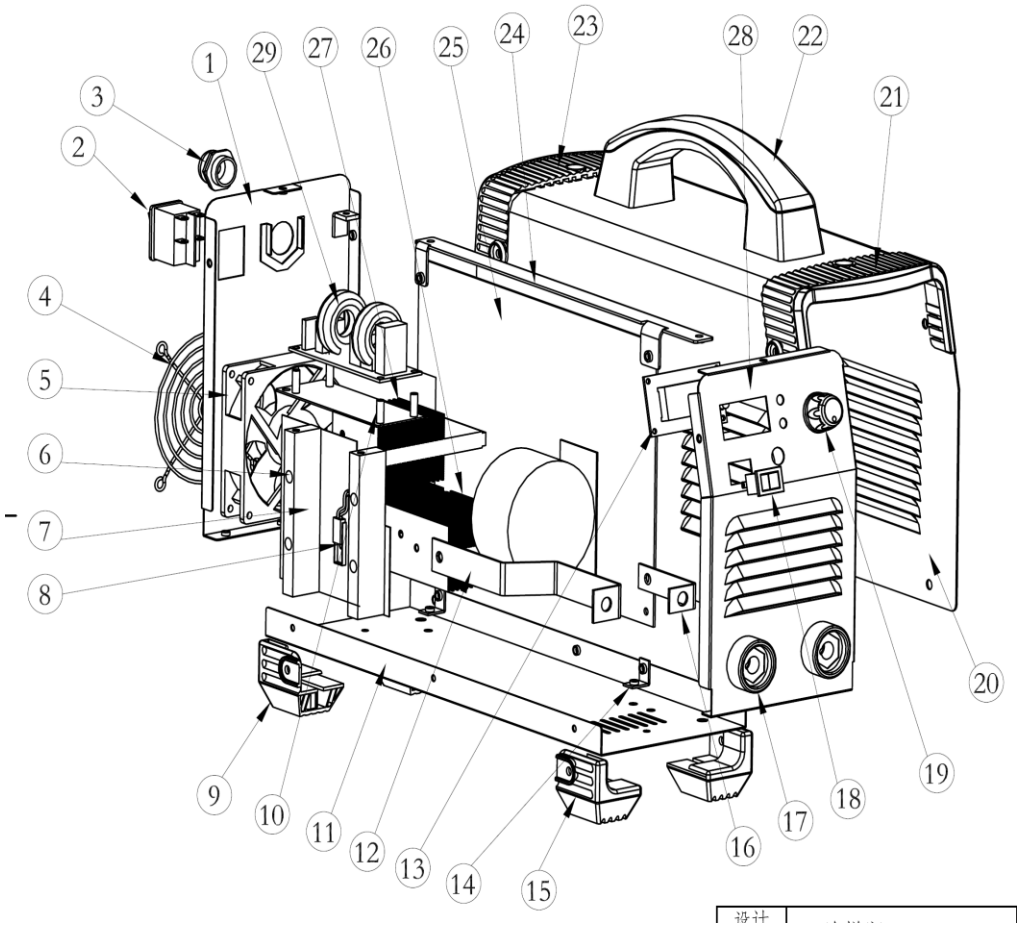


| No. | Part no. | Part name | Qty. |
|---|---|---|---|
| 1 | 10067084 | rear panel | 1 |
| 2 | 10056467 | rocker switch | 1 |
| 3 | 10004886 | cable clip | 1 |
| 4 | 10007333 | fan guard | 1 |
| 5 | 10044817 | fan | 1 |
| 6 | 10067027 | windshield | 1 |
| 7 | 10050413 | long column | 2 |
| 8 | 10050392 | thermoswitch | 1 |
| 9 | 10046932 | plastic feet | 2 |
| 10 | / | | 0 |
| 11 | 10067023 | machine base | 1 |
| 12 | 10067022 | connection | 1 |
| 13 | 10046712 | display meter | 1 |
| 14 | 10037028 | angel support | 2 |
| 15 | 10046933 | plastic feet | 2 |
| 16 | 10057595 | connection | 1 |
| 17 | 10045432 | quick socket | 2 |
| 18 | 10062441 | main switch | 1 |
| 19 | 10066872 | knob | 1 |
| 20 | 10057982 | shell | 1 |
| 21 | 10047106 | front plastic part | 1 |
| 22 | 10046896 | hadle | 1 |
| 23 | 10047109 | rear plastic part | 1 |
| 24 | | / | 0 |
| 25 | 10066805 | main board | 1 |
| 26 | 10054622 | heat sink | 2 |
| 27 | 10059772 | heat sink | 4 |
| 28 | 10059610 | front panel | 1 |
| 29 | / | EMC board | 0 |